DLC3

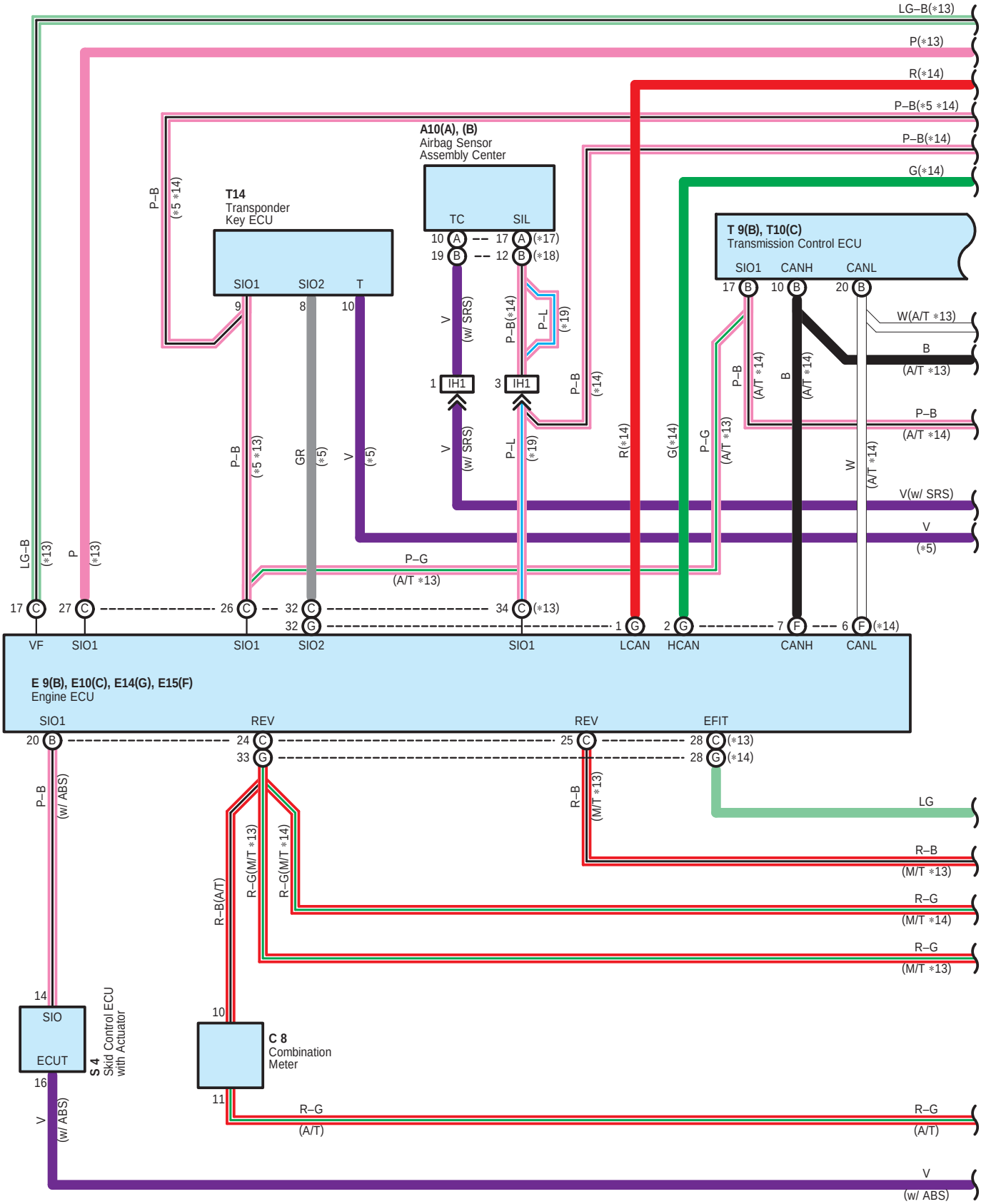
LG–B(*13)
P(*13)
R(*14)
P–B(*5 *14)
P–B(*14)
G(*14)
A10(A), (B)
Airbag Sensor
Assembly Center
TC
SIL
T14
Transponder
Key ECU
SIO1
SIO2
T
T 9(B), T10(C)
Transmission Control ECU
SIO1
CANH
CANL
W(A/T *13)
B
(A/T *13)
P–B
(A/T *14)
V(w/ SRS)
V
(*5)
P–G
(A/T *13)
IH1
IH1
VF
SIO1
SIO1
SIO2
SIO1
LCAN
HCAN
CANH
CANL
E 9(B), E10(C), E14(G), E15(F)
Engine ECU
SIO1
REV
REV
EFIT
LG
R–B
(M/T *13)
R–G
(M/T *14)
R–G
(M/T *13)
R–G
(A/T)
R–G
(A/T)
V
(w/ ABS)
SIO
ECUT
S 4
Skid Control ECU
with Actuator
C 8
Combination
Meter

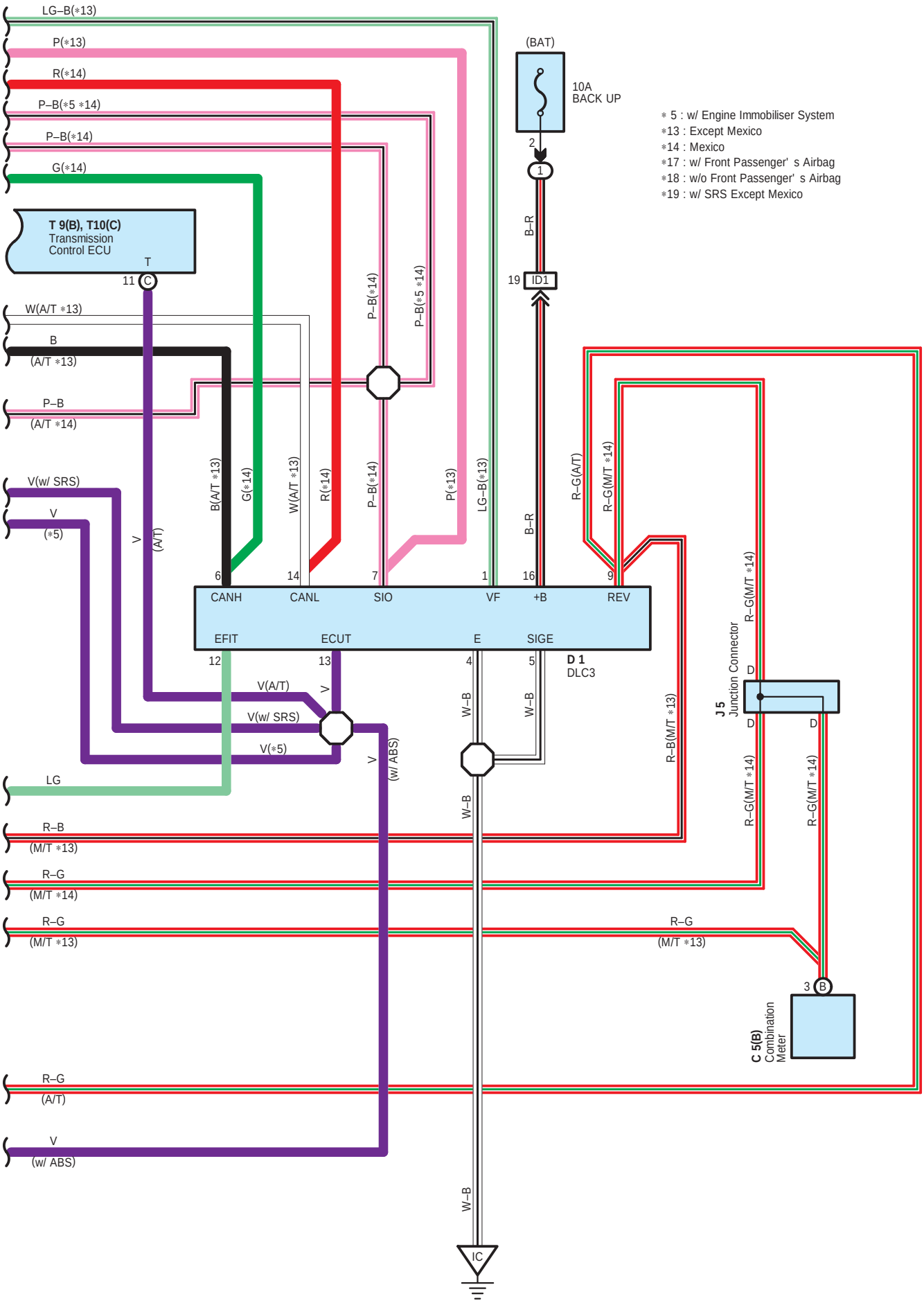
LG–B(∗13)
P(∗13)
R(∗14)
P–B(∗5 ∗14)
P–B(∗14)
G(∗14)
T 9(B), T10(C)
Transmission
Control ECU
T
11 C
W(A/T ∗13)
B
(A/T ∗13)
P–B
(A/T ∗14)
V(w/ SRS)
V
(∗5)
V
(A/T)
B(A/T ∗13)
G(∗14)
W(A/T ∗13)
R(∗14)
P–B(∗14)
P(∗13)
LG–B(∗13)
P–B(∗14)
P–B(∗5 ∗14)
(BAT)
10A
BACK UP
2
1
B–R
19 ID1
B–R
R–G(A/T)
R–G(M/T ∗14)
∗ 5 : w/ Engine Immobiliser System
∗13 : Except Mexico
∗14 : Mexico
∗17 : w/ Front Passenger' s Airbag
∗18 : w/o Front Passenger' s Airbag
∗19 : w/ SRS Except Mexico
6
14
7
1
16
9
CANH
CANL
SIO
VF
+B
REV
EFIT
ECUT
E
SIGE
12
13
4
5
D 1
DLC3
V(A/T)
V
V(w/ SRS)
V(∗5)
V
(w/ ABS)
W–B
W–B
W–B
R–B(M/T ∗13)
J 5
Junction Connector
D
D
D
R–G(M/T ∗14)
R–G(M/T ∗14)
R–G(M/T ∗14)
LG
R–B
(M/T ∗13)
R–G
(M/T ∗14)
R–G
(M/T ∗13)
R–G
(M/T ∗13)
3 B
C 5(B)
Combination
Meter
R–G
(A/T)
V
(w/ ABS)
W–B
IC

DLC3

: Parts Location

Code		See Page	Code		See Page	Code		See Page
A10	A	28 (LHD)	E9	B	28 (LHD)	S4		25 (*1)
		36 (*5)			36 (*5)			33 (*3)
	B	28 (LHD)			38 (*6)			35 (*4)
C5	B	28 (LHD)	E10	C	28 (LHD)	T9	B	29 (LHD)
C8		28 (LHD)			36 (*5)			39 (*6)
		38 (*6)			38 (*6)	T10	C	29 (LHD)
D1		28 (LHD)	E14	G	28 (LHD)			39 (*6)
		36 (*5)	E15	F	28 (LHD)	T14		29 (LHD)
		38 (*6)	J5		29 (LHD)			37 (*5)

: Relay Blocks

Code	See Page	Relay Blocks (Relay Block Location)
1	22	Engine Room R/B (Engine Compartment Right)

: Connector Joining Wire Harness and Wire Harness

Code	See Page	Joining Wire Harness and Wire Harness (Connector Location)
ID1	44 (LHD)	Engine Room Main Wire and Instrument Panel Wire (Right Kick Panel)
	48 (*5)	Engine Room Main Wire and Instrument Panel Wire (Cowl Side Panel RH)
	49 (*6)	
IH1	44 (LHD)	Instrument Panel Wire and Instrument Panel Wire (Instrument Panel RH)
	48 (*5)	Instrument Panel Wire and Instrument Panel Wire (Instrument Panel LH)

: Ground Points

Code	See Page	Ground Points Location
IC	44 (LHD)	Cowl Side Panel LH
	48 (*5)	Right Kick Panel
	49 (*6)	

* 1 : LHD 3SZ–VE * 2 : LHD K3–VE * 3 : RHD 3SZ–VE * 4 : RHD K3–VE * 5 : RHD w/ Heater * 6 : RHD w/o Heater